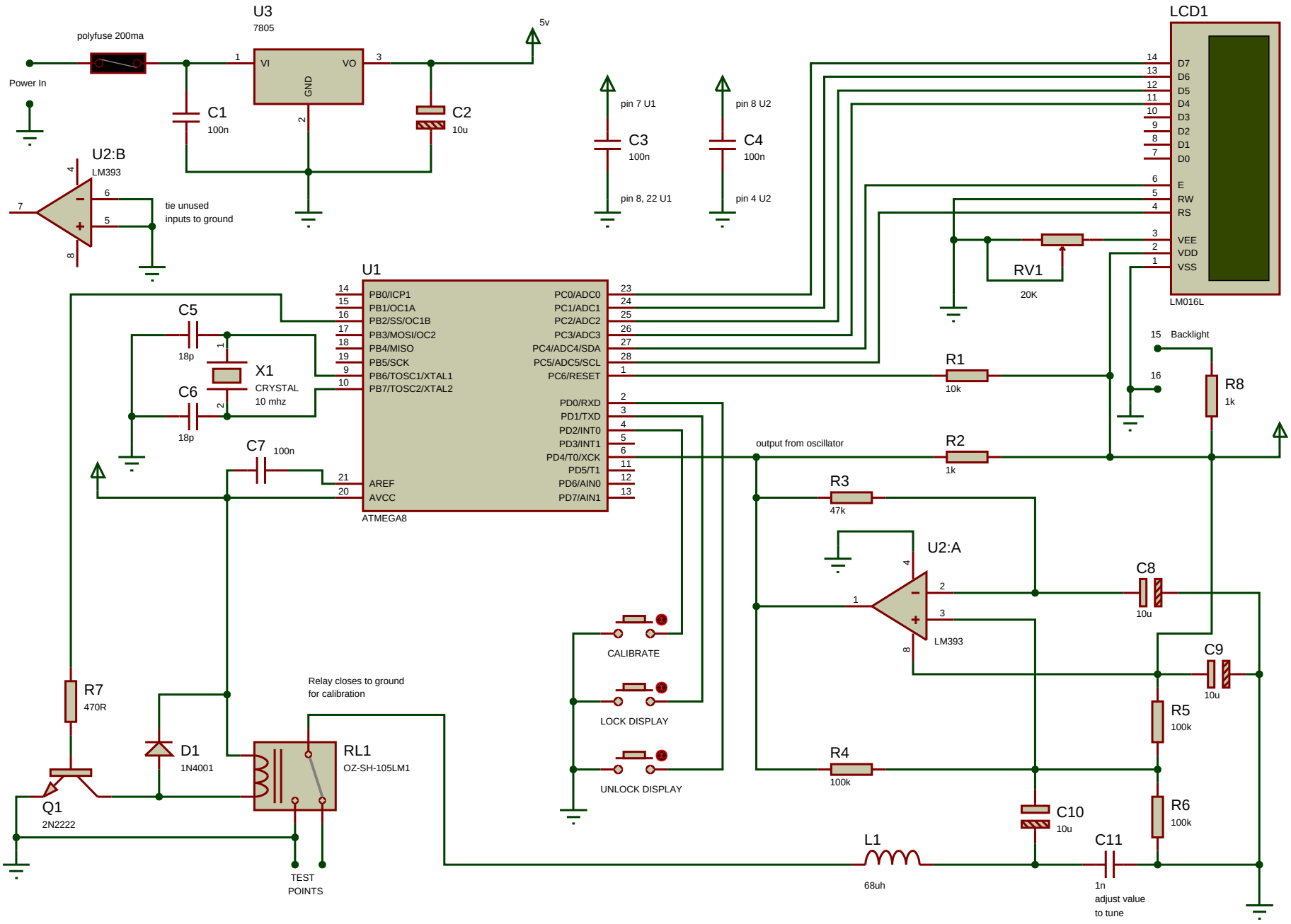
U3
7805
polyfuse 200ma
Power In
VI
VO
GND
5v
C1
100n
C2
10u
U2:B
LM393
tie unused
inputs to ground
pin 7 U1
C3
100n
pin 8, 22 U1
pin 8 U2
C4
100n
pin 4 U2
LCD1
D7
D6
D5
D4
D3
D2
D1
D0
E
RW
RS
VEE
VDD
VSS
LM016L
RV1
20K
U1
PB0/ICP1
PB1/OC1A
PB2/SS/OC1B
PB3/MOSI/OC2
PB4/MISO
PB5/SCK
PB6/TOSC1/XTAL1
PB7/TOSC2/XTAL2
PC0/ADC0
PC1/ADC1
PC2/ADC2
PC3/ADC3
PC4/ADC4/SDA
PC5/ADC5/SCL
PC6/RESET
PD0/RXD
PD1/TXD
PD2/INT0
PD3/INT1
PD4/T0/XCK
PD5/T1
PD6/AIN0
PD7/AIN1
AREF
AVCC
ATMEGA8
C5
18p
X1
CRYSTAL
10 mhz
C6
18p
C7
100n
R1
10k
R2
1k
R8
1k
Backlight
output from oscillator
R3
47k
U2:A
LM393
C8
10u
C9
10u
R5
100k
R6
100k
R4
100k
C10
10u
C11
1n
adjust value
to tune
L1
68uh
CALIBRATE
LOCK DISPLAY
UNLOCK DISPLAY
R7
470R
D1
1N4001
Q1
2N2222
Relay closes to ground
for calibration
RL1
OZ-SH-105LM1
TEST
POINTS